7.92mm Contact Pitch High-Current Connectors for Internal Power Supplies (UL, C-UL and TÜV Listed)

DF22 Series

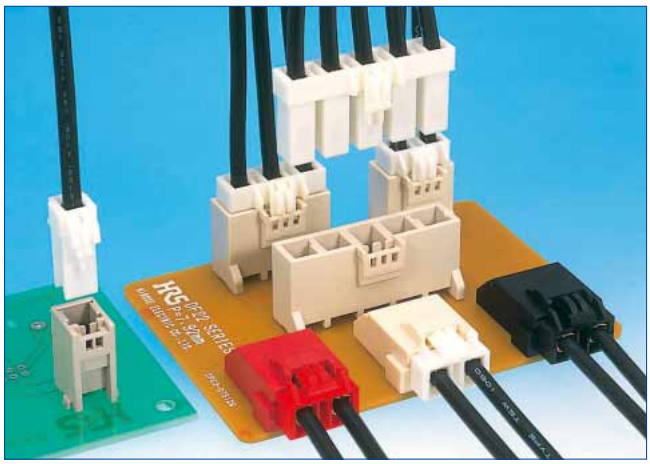

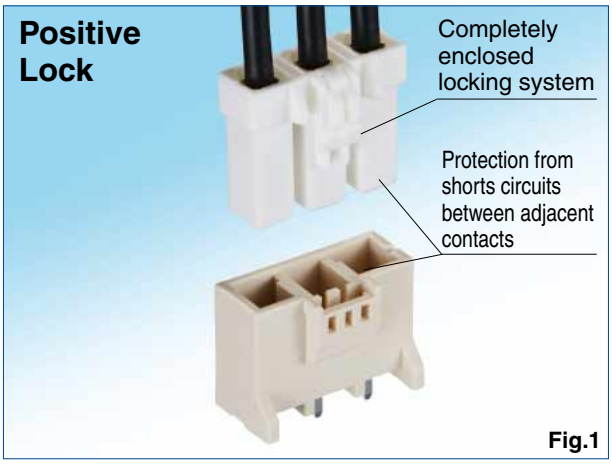

Fig.1

■Features

1. Rated up to 30A

Single position connector can carry current of 30A with 10 AWG conductor. Please refer to Table #1 for current ratings for multi-position connectors using other conductor sizes.

2. Positive Locking Function

Reliable interior lock protects mated connectors from accidental disconnection. (Fig.1)

3. Prevention of Incorrect Connections

To prevent incorrect connection when using multiple connectors having the same Number of contacts, 3 product types having different mating configurations are available. (Fig.2)

4. Molded-in contact retention tabs

Handling of terminated contacts during the crimping is easier and avoids entangling of wires, since there are no protruding metal tabs.

5. Prevention of incorrect board placement

Built-in posts assure correct connector placement and orientation on the board.

6. Supports resin sealing

Allows potting up to 10mm.

7. Prevention of Short Circuits Between Adjacent Contacts

Each Contact is completely surrounded by the housing wall electrically isolating it from adjacent contacts.

8. Increased Retention Force of Crimped Contacts

Improved pull-out force design.

9. Full Line of Crimp Socket Contacts

Hirose has released DF22C-∗S-7.92C which has easy to push/release latch design. and DF22B-∗S-7.92C/ DF22C-∗S-7.92C which has improved electrical insulation properties.

10. In-line Connections

Wire-to-wire connection is also available. Space is saved with 2-row (2×2) layout for 4 pos.

11. UL, C-UL, and TÜV Certified.

12. Glow Wire compliance (Compliant with IEC 60695-2-11)

Keying for multiple use

●**R Type** (Guide key : right side, Color : black)

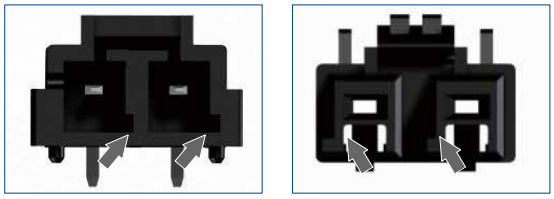

●**Standard Type** (Guide key : inside, Color : natural)

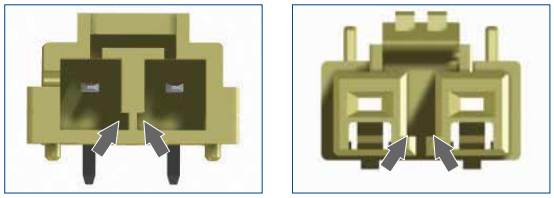

●**L Type** (Guide key : left side, Color : red)

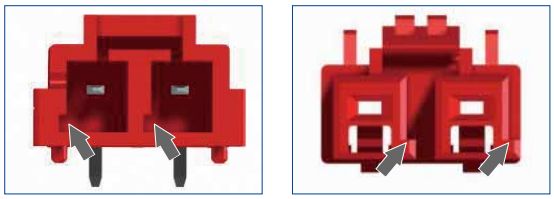

∗The image on the left show header (the board dip side), the image on the right show the socket (cable side).

∗The guide key position is indicated in position facing the mating surface of the header.

Fig.2

Mar.1.2016 Copyright 2016 HIROSE ELECTRIC CO., LTD. All Rights Reserved.

■Product Specifications

Ratings	Current rating (Note 1)	No. of contacts	10 AWG	12 AWG	14 AWG	16 AWG	Operating temperature range	-35℃ to 85℃ (Note 2)
		1	30A	25A	20A	15A	Operating humidity range	20% to 80%
		2	25A	20A	18A	15A		
		3	25A	20A	18A	15A	Storage temperature range	-10℃ to 60℃ (Note 3)
		4	22A	18A	15A	13A	Storage humidity range	40% to 70% (Note 3)
		5	22A	18A	15A	13A	UL/C-UL/TÜV	File No. and Recognition No.
	Voltage rating	Specification		AC/DC 1000V			UL	: E52653
		UL/C-UL		AC/DC 600V			C-UL	: E52653
		TÜV		AC/DC 600V			TÜV	: R9950703

Item	Specifications	Conditions
1. Contact Resistance	No more than 5mΩ	Measured at 1mA and no higher than 20mV
2. Insulation Resistance	No less than 1,000MΩ	Measured at DC=1000V
3. Withstand Voltage	No flashover or breakdown	AC 2500 V is applied for one minute.
4. Contact Insertion and Extraction Forces	0.3N min., 5N max	Measured with a steel pin of 1.6 x 0.8 ± 0.002 thickness
5. Durability	Contact resistance : no more than 10mΩ	30 mating cycles
6. Vibration Resistance	No electrical discontinuity of 1μs or greater	Frequency 10-55 Hz, half amplitude 0.75 mm, 10 times in each of the three directions
7. Shock Resistance	No electrical discontinuity of 1μs or greater	Accelerated velocity : 490 m/s² for 11 ms, half-sine wave in 3 directions, 3 times for each direction
8. Moisture-Resistance	Contact resistance : no more than 10mΩ	Temperature : 40 ± 2℃ ; humidity : 90 to 95%, left as it is for 96 hours
9. Temperature cycles	Contact resistance : no more than 10mΩ	(-55℃ : 30 minutes→ 5 to 35℃ : 5 minutes→ 85℃ : 30 minutes→ 5 to 35℃ : 5 minutes) for 5 cycles
10. Solder heat Resistance	The resin parts should withstand the temperature and resist melting.	Flow : 250℃, 10 sec Hand soldering : temperature of soldering iron at 300℃ for 3 seconds

Note 1 : Current rating of header is 30A (1 pos.), 25A (2 to 3 pos.) and 22A (4 to 5 pos.)
Note 2 : Includes temperature rise caused by current flow.
Note 3 : The storage condition refers to long-term storage of the product on the shelf before assembly. Please use the operating temperature for temporary storage such as pre-assembly and during shipping.

■Materials / Finish

Product	Part	Material	Finish	Remarks
Sockets	Insulator	Polyamide	Color : Natural white (Note)	UL94V-0
Crimp contacts	Contacts	High conductivity copper alloy	Tin-lead plated or Gold plated	——
Headers	Insulator	Polyamide (Glass reinforced)	Color : Natural beige (Note)	UL94V-0
	Contacts	High conductivity copper alloy	Tin-copper plated or Gold plated	——

Note : Standard Color, colors of the differing coupling forms are black for DF22R and red for DF22L.

■Product Number Structure

●Socket, Header

DF22 B L - 2 S - 7.92 C (**)
❶ ❷ ❸ ❹ ❺ ❻ ❼

❶ Series name : DF22

❷ Form Type
Sockets
Blank : Standard height, standard lock (Type I)
B : Long type, standard lock (Type III)
C : Long type, ergonomic lock (Type IV)
In-line Plugs
Blank : With panel stop
A : Without panel stop

❸ Guide key type
Blank : Inside (Color: natural)
R : Right side (Color: black)
L : Left side (Color: red)

❹ Number of contacts : 1 to 5

❺ Connector type
S : Socket
DS : Double-row socket
P : Header
EP : In-line plug
DEP : Double-row in-line plug
RS/P : Retainer

❻ Contact pitch : 7.92 mm

❼ Type of housing
C : Crimp housing
DSA : Straight header
DS : Right-angle header
No letter : Retainer

●Contacts

DF22 A - 1416 SCF A
❶ ❽ ❾ ❿ ⓫

❽ Applicable Cable
Blank : UL1430
A : UL1015

❾ Applicable Conductor
1416 : 14 to 16 AWG
1012 : 10 to 12 AWG

❿ Packaging
SCF : Socket contacts / reel
SC : Socket contacts / pack
PCF : In-line plug contacts / reel
PC : In-line plug contacts / pack

⓫ Plating specifications
Blank : Tin plated
A : Gold plated

Mar.1.2016 Copyright 2016 HIROSE ELECTRIC CO., LTD. All Rights Reserved.

■Crimp Sockets (Standard Height Type)

Shown with terminated and contacts installed.

Shown with terminated and contacts installed.

1 Pos.

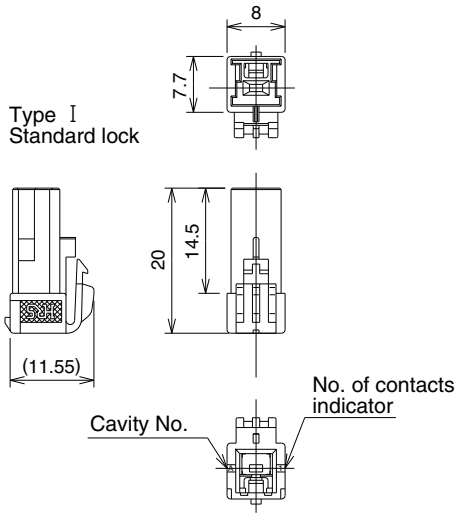

2 to 5 Pos.

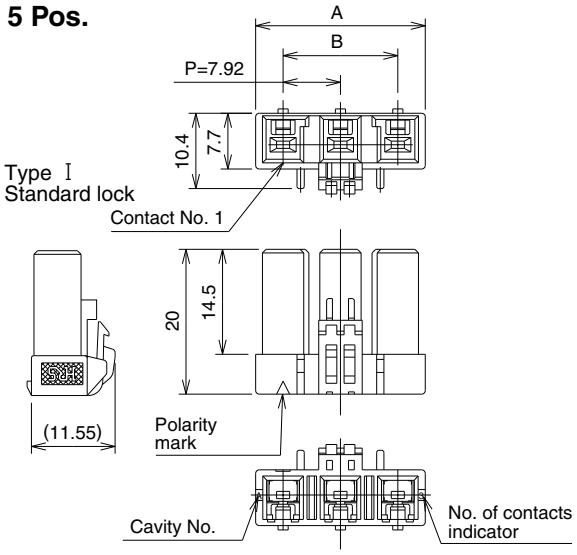

■ Type I

Height : Standard type, Standard lock

Note : The part number and HRS No. have changed to reflect the product form change of the 2 to 5 pos. types.

Standard Type (Guide Key : Inside, Color : White) Unit : mm

Part No.	HRS No.	No. of Contacts	A	B
DF22-1S-7.92C(28)	680-1012-2 28	1	8.00	—
DF22-2S-7.92C(28)	680-1004-4 28	2	15.50	7.92
DF22-3S-7.92C(28)	680-1005-7 28	3	23.42	15.84
DF22-4S-7.92C(28)	680-1006-0 28	4	31.34	23.76
DF22-5S-7.92C(28)	680-1007-2 28	5	39.26	31.68

R Type (Guide Key : Right Side, Color : Black) Unit : mm

Part No.	HRS No.	No. of Contacts	A	B
DF22R-1S-7.92C(28)	680-1026-7 28	1	8.00	—
DF22R-2S-7.92C(28)	680-1027-0 28	2	15.50	7.92
DF22R-3S-7.92C(28)	680-1028-2 28	3	23.42	15.84
DF22R-4S-7.92C(28)	680-1029-5 28	4	31.34	23.76
DF22R-5S-7.92C(28)	680-1030-4 28	5	39.26	31.68

L Type (Guide Key : Left Side, Color : Red) Unit : mm

Part No.	HRS No.	No. of Contacts	A	B
DF22L-1S-7.92C(28)	680-1031-7 28	1	8.00	—
DF22L-2S-7.92C(28)	680-1032-0 28	2	15.50	7.92
DF22L-3S-7.92C(28)	680-1033-2 28	3	23.42	15.84
DF22L-4S-7.92C(28)	680-1034-5 28	4	31.34	23.76
DF22L-5S-7.92C(28)	680-1035-8 28	5	39.26	31.68

Note 1 : Bag packaging (100 pcs/pack). Order by number of packs.
Note 2 : Every even number position has a different locking design.

Mar.1.2016 Copyright 2016 HIROSE ELECTRIC CO., LTD. All Rights Reserved.

■Crimp Sockets (Height, Long Type)

Shown with terminated and contacts installed.

Shown with terminated and contacts installed.

1 Pos.

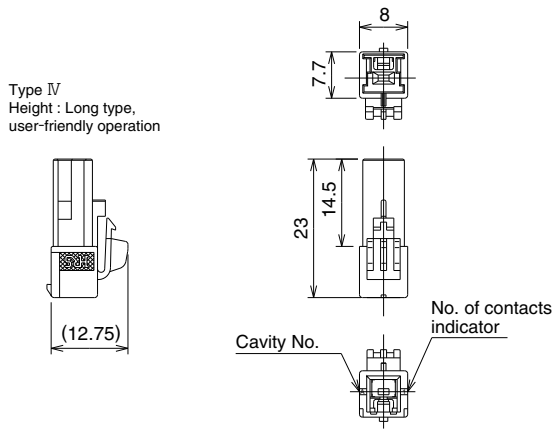

2 to 5 Pos.

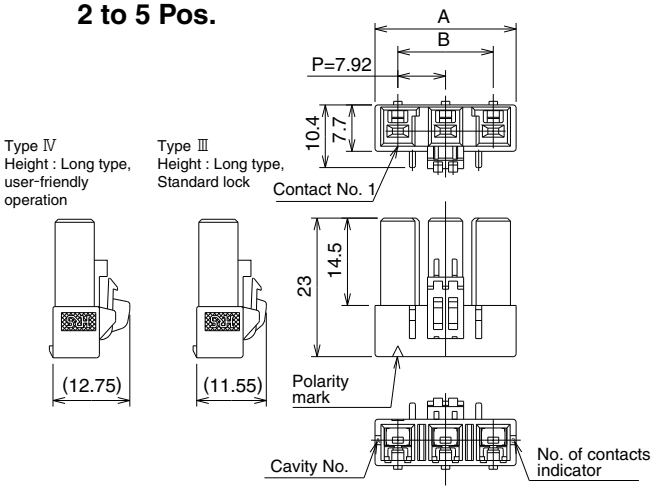

■ Type III

Height : Long type, Standard lock

Standard Type (Guide Key : Inside, Color : White) Unit : mm

Part No.	HRS No.	No. of Contacts	A	B
DF22B-2S-7.92C	680-1097-5	2	15.50	7.92
DF22B-3S-7.92C	680-1098-8	3	23.42	15.84
DF22B-4S-7.92C	680-1099-0	4	31.34	23.76
DF22B-5S-7.92C	680-1100-8	5	39.26	31.68

Note 1 : Bag packaging (100 pcs/pack). Order by number of packs.
Note 2 : Every even number position has a different locking design.

■ Type IV

Height : Long type, Enhanced ergonomic lock

Standard Type (Guide Key : Inside, Color : White) Unit : mm

Part No.	HRS No.	No. of Contacts	A	B
DF22C-1S-7.92C	680-1101-0	1	8.00	—
DF22C-2S-7.92C	680-1102-3	2	15.50	7.92
DF22C-3S-7.92C	680-1103-6	3	23.42	15.84
DF22C-4S-7.92C	680-1104-9	4	31.34	23.76

R Type (Guide Key : Right Side, Color : Black) Unit : mm

Part No.	HRS No.	No. of Contacts	A	B
DF22CR-3S-7.92C	680-1130-9	3	23.42	15.84

L Type (Guide Key : Left Side, Color : Red) Unit : mm

Part No.	HRS No.	No. of Contacts	A	B
DF22CL-1S-7.92C	680-1133-7	1	8.00	—
DF22CL-3S-7.92C	680-1135-2	3	23.42	15.84

Note 1 : Bag packaging (100 pcs/pack). Order by number of packs.
Note 2 : Every even number position has a different locking design.

Mar.1.2016 Copyright 2016 HIROSE ELECTRIC CO., LTD. All Rights Reserved.

Mar.1.2016 Copyright 2016 HIROSE ELECTRIC CO., LTD. All Rights Reserved.

■Straight Header

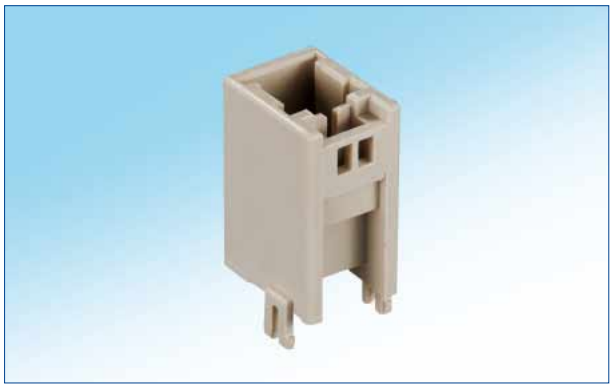

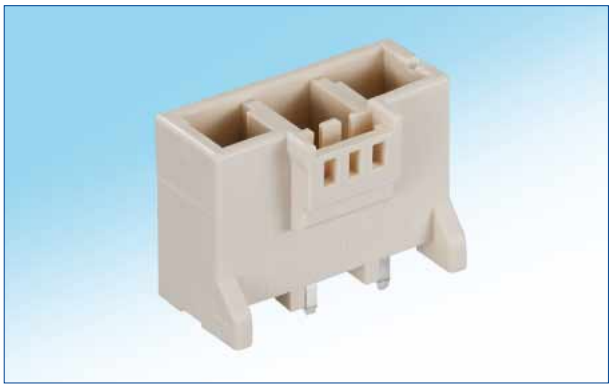

1 Pos.

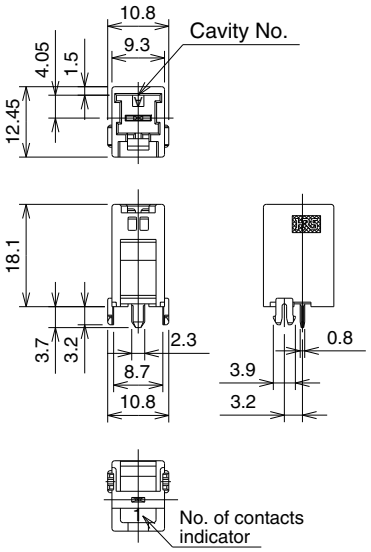

2 to 5 Pos.

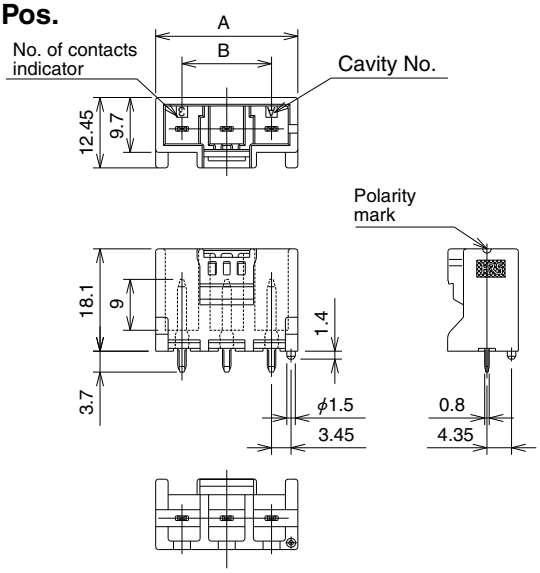

[Specification number]
(05) : Tin-copper plated bag packaging
(25) : Tin-copper plated tray packaging (only 1 pos)
(06) : Gold plated, bag packaging

Standard Type (Guide Key : Inside, Color : Natural Beige) Unit : mm

Part No.	HRS No.	No. of Contacts	A	B	Bag Packaging	Tray Packaging	Tin-copper plated	Gold plated
DF22-1P-7.92DSA(**)	680-1013-5 **	1	—	—	—	✓	✓	—
DF22-2P-7.92DSA(**)	680-1014-8 **	2	17.22	7.92	✓	—	✓	✓
DF22-3P-7.92DSA(**)	680-1015-0 **	3	25.14	15.84	✓	—	✓	✓
DF22-4P-7.92DSA(**)	680-1016-3 **	4	33.06	23.76	✓	—	✓	—
DF22-5P-7.92DSA(**)	680-1017-6 **	5	40.98	31.68	✓	—	✓	—

R Type (Guide Key : Right Side, Color : Black) Unit : mm

Part No.	HRS No.	No. of Contacts	A	B	Bag Packaging	Tray Packaging	Tin-copper plated	Gold plated
DF22R-1P-7.92DSA(**)	680-1036-0 **	1	—	—	—	✓	✓	—
DF22R-2P-7.92DSA(**)	680-1037-3 **	2	17.22	7.92	✓	—	✓	—
DF22R-3P-7.92DSA(**)	680-1038-6 **	3	25.14	15.84	✓	—	✓	—
DF22R-4P-7.92DSA(**)	680-1039-9 **	4	33.06	23.76	✓	—	✓	—
DF22R-5P-7.92DSA(**)	680-1040-8 **	5	40.98	31.68	✓	—	✓	—

L Type (Guide Key : Left Side, Color : Red) Unit : mm

Part No.	HRS No.	No. of Contacts	A	B	Bag Packaging	Tray Packaging	Tin-copper plated	Gold plated
DF22L-1P-7.92DSA(**)	680-1041-0 **	1	—	—	—	✓	✓	—
DF22L-2P-7.92DSA(**)	680-1042-3 **	2	17.22	7.92	✓	—	✓	—
DF22L-3P-7.92DSA(**)	680-1043-6 **	3	25.14	15.84	✓	—	✓	—
DF22L-4P-7.92DSA(**)	680-1044-9 **	4	33.06	23.76	✓	—	✓	—
DF22L-5P-7.92DSA(**)	680-1045-1 **	5	40.98	31.68	✓	—	✓	—

Note 1 : Bag packaging (100 pcs/pack). Order by number of packs.
Note 2 : Tray packaging (150 pcs/tray). Order by number of 150.
Note 3 : Every even number position has a different locking design.
Note 4 : Please contact Hirose representative if you have request for non-standard Au plating.

◆Recommended PCB Layout (Board thickness : 1.6±0.1)

1 Pos.

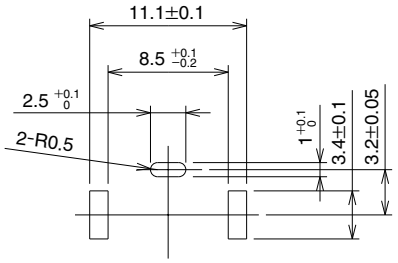

2 to 5 Pos.

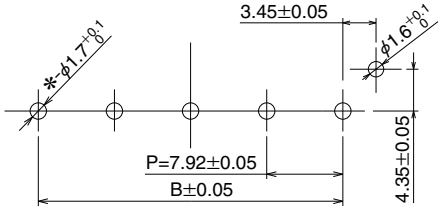

Mar.1.2016 Copyright 2016 HIROSE ELECTRIC CO., LTD. All Rights Reserved.

■Right Angle Header

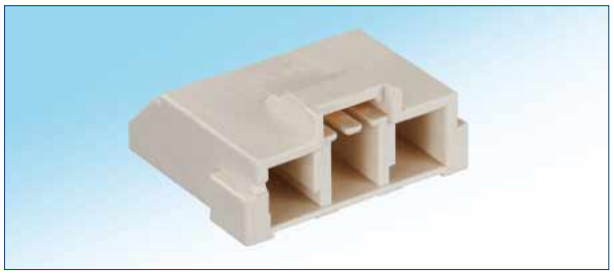

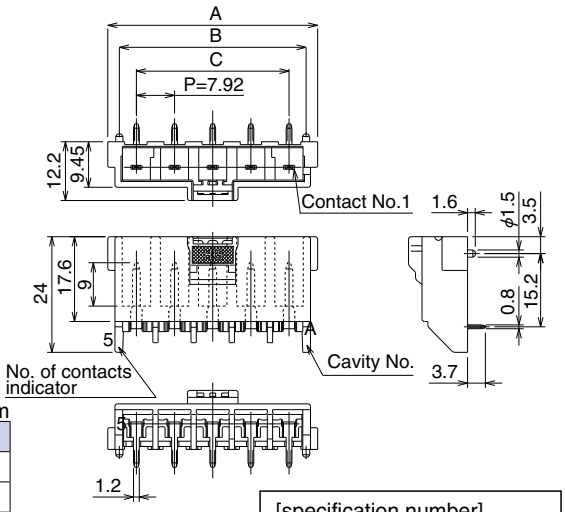

[specification number]
(05), (35) : Tin-copper plated
(06), (36) : Gold plated

Standard Type (Guide Key : Inside, Color : Natural Beige) Unit : mm

Part No.	HRS No.	No. of Contacts	A	B	C	Tin-copper plated	Gold plated
DF22-2P-7.92DS(**)	680-1008-5 **	2	19.80	15.00	7.92	(35)	(36)
DF22-3P-7.92DS(**)	680-1009-8 **	3	27.72	22.92	15.84	(05)	(06)
DF22-4P-7.92DS(**)	680-1010-7 **	4	35.64	30.84	23.76	(05)	—
DF22-5P-7.92DS(**)	680-1011-0 **	5	43.56	38.76	31.68	(05)	(06)

R Type (Guide Key : Right Side, Color : Black) Unit : mm

Part No.	HRS No.	No. of Contacts	A	B	C	Tin-copper plated	Gold plated
DF22R-2P-7.92DS(**)	680-1018-9 **	2	19.80	15.00	7.92	(05)	—
DF22R-3P-7.92DS(**)	680-1019-1 **	3	27.72	22.92	15.84	(05)	(06)
DF22R-4P-7.92DS(**)	680-1020-0 **	4	35.64	30.84	23.76	(05)	—
DF22R-5P-7.92DS(**)	680-1021-3 **	5	43.56	38.76	31.68	(05)	—

L Type (Guide Key : Left Side, Color : Red) Unit : mm

Part No.	HRS No.	No. of Contacts	A	B	C	Tin-copper plated	Gold plated
DF22L-2P-7.92DS(**)	680-1022-6 **	2	19.80	15.00	7.92	(05)	(06)
DF22L-3P-7.92DS(**)	680-1023-9 **	3	27.72	22.92	15.84	(05)	(06)
DF22L-4P-7.92DS(**)	680-1024-1 **	4	35.64	30.84	23.76	(05)	—
DF22L-5P-7.92DS(**)	680-1025-4 **	5	43.56	38.76	31.68	(05)	(06)

Note 1 : Bag packaging (100 pcs/pack). Order by number of packs.
Note 2 : Every even number position has a different locking design.
Note 3 : Please contact Hirose representative if you have request for non-standard Au plating.

◆Recommended PCB Layout (Board thickness : 1.6±0.1)

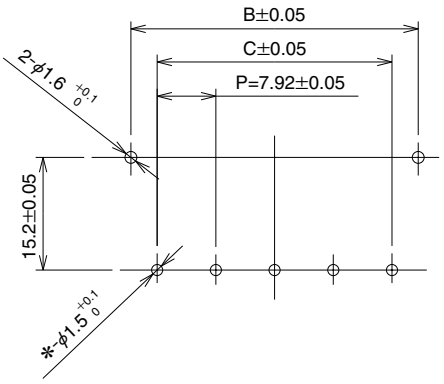

■In-line Plug

Shown with terminated and contacts installed.

1 Pos.

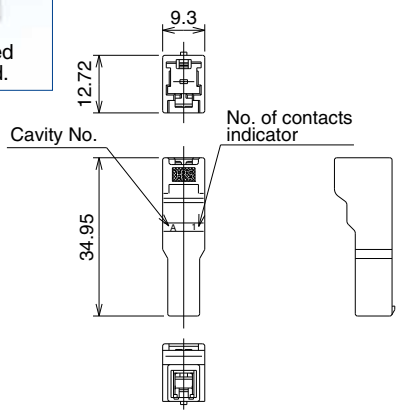

Shown with terminated and contacts installed.

2, 3 Pos.

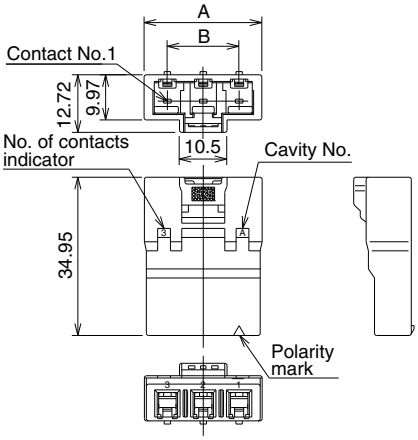

Standard Type (Guide Key : Inside, Color : Natural Beige) Unit : mm

Part No.	HRS No.	No. of Contacts	A	B
DF22A-1EP-7.92C	680-1053-0	1	9.30	—
DF22A-2EP-7.92C	680-1054-2	2	18.00	7.92
DF22A-3EP-7.92C	680-1055-5	3	26.00	15.84

L Type (Guide Key : Left Side, Color : Red) Unit : mm

Part No.	HRS No.	No. of Contacts	A	B
DF22AL-2EP-7.92C	680-1074-0	2	18.00	7.92

Note 1 : Bag packaging (100 pcs/pack). Order by number of packs.
Note 2 : Every even number position has a different locking design.

R Type (Guide Key : Right Side, Color : Black) Unit : mm

Part No.	HRS No.	No. of Contacts	A	B
DF22AR-2EP-7.92C	680-1069-0	2	18.00	7.92
DF22AR-3EP-7.92C	680-1070-9	3	26.00	15.84

■In-line Plug (Panel Lock Type)

Shown with terminated and contacts installed.

Shown with terminated and contacts installed.

1 Pos.

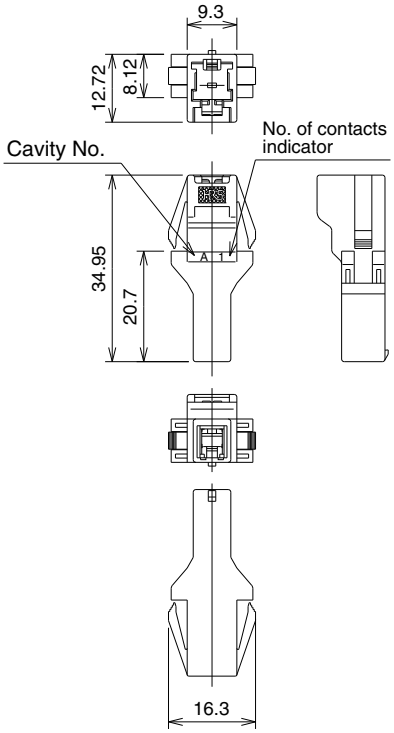

2, 3 Pos.

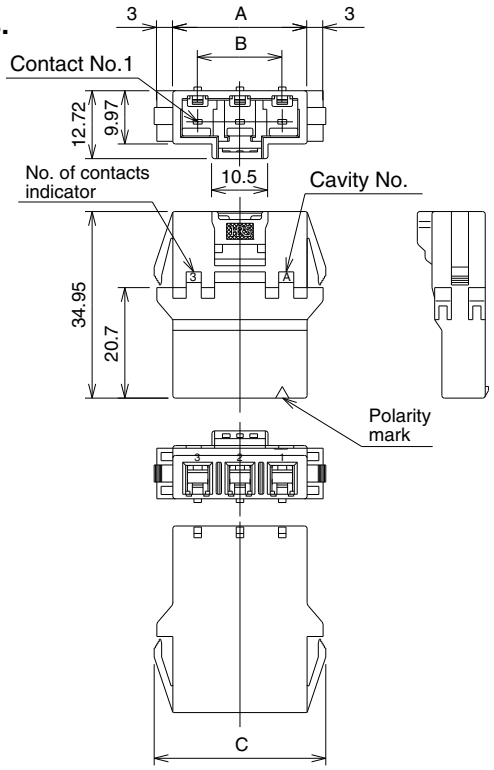

Standard Type (Guide Key : Inside, Color : White) Unit : mm

Part No.	HRS No.	No. of Contacts	A	B	C
DF22-1EP-7.92C	680-1048-0	1	9.30	—	16.30
DF22-2EP-7.92C	680-1049-2	2	17.22	7.92	24.22
DF22-3EP-7.92C	680-1050-1	3	25.14	15.84	32.14

R Type (Guide Key : Right Side, Color : Black) Unit : mm

Part No.	HRS No.	No. of Contacts	A	B	C
DF22R-2EP-7.92C	680-1059-6	2	17.22	7.92	24.22
DF22R-3EP-7.92C	680-1060-5	3	25.14	15.84	32.14

L Type (Guide Key : Left Side, Color : Red) Unit : mm

Part No.	HRS No.	No. of Contacts	A	B	C
DF22L-1EP-7.92C	680-1063-3	1	9.30	—	16.30
DF22L-2EP-7.92C	680-1064-6	2	17.22	7.92	24.22

Note 1 : Bag packaging (100 pcs/pack). Order by number of packs.
Note 2 : Every even number position has a different locking design.

◆Panel Cutout

1 Pos.

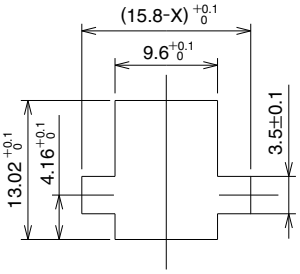

Panel thickness	X
2.0	0.48
1.6	0.96
1.2	1.44
0.8	1.92

2, 3 Pos.

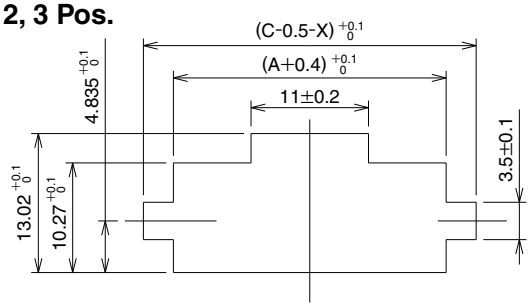

Note 1 : Please ensure when mating this connector that the tapered portions of the panel are facing outward towards the receptacle connector's mating interface.

Mar.1.2016 Copyright 2016 HIROSE ELECTRIC CO., LTD. All Rights Reserved.

Mar.1.2016 Copyright 2016 HIROSE ELECTRIC CO., LTD. All Rights Reserved.

■In-line Double-row Socket

Shown with terminated and contacts installed.

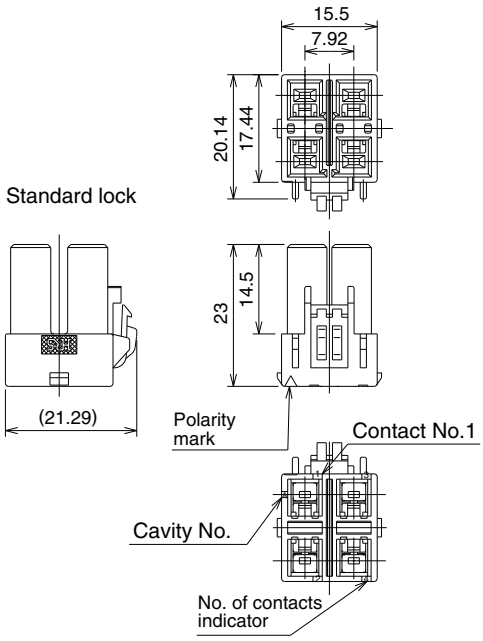

Standard Type (Guide Key : Inside, Color : White) Unit : mm

Part No.	HRS No.	No. of Contacts	Lock type
DF22B-4DS-7.92C	680-1142-8	4	Standard lock

R Type (Guide Key : Right Side, Color : Black) Unit : mm

Part No.	HRS No.	No. of Contacts	Lock type
DF22BR-4DS-7.92C	680-1156-2	4	Standard lock

L Type (Guide Key : Left Side, Color : Red) Unit : mm

Part No.	HRS No.	No. of Contacts	Lock type
DF22BL-4DS-7.92C	680-1161-2	4	Standard lock

Note : Bag packaging (100 pcs/pack). Order by number of packs.

■In-line Double-row Plug

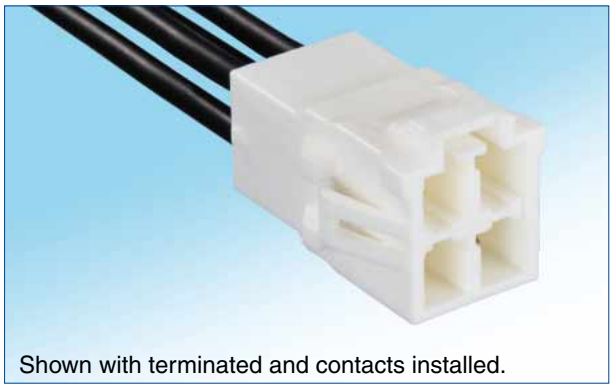

Shown with terminated and contacts installed.

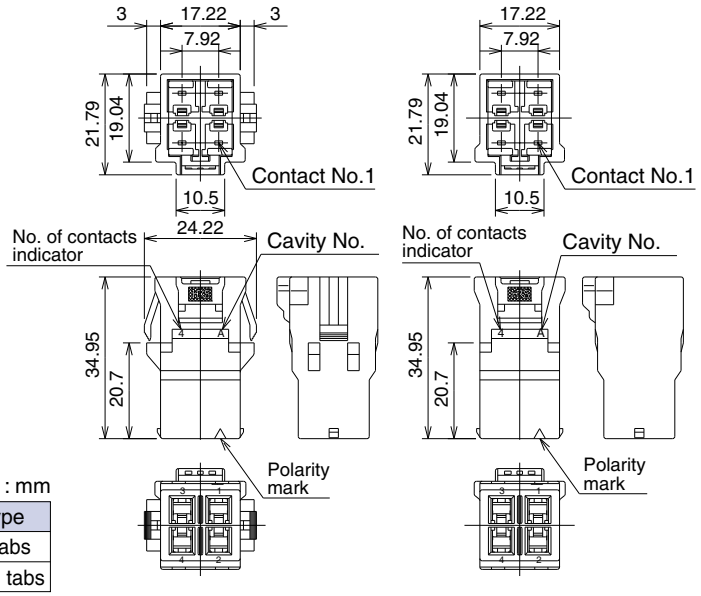

Standard Type (Guide Key : Inside, Color : White) Unit : mm

Part No.	HRS No.	No. of Contacts	Connector type
DF22-4DEP-7.92C	680-1051-4	4	With snap-in tabs
DF22A-4DEP-7.92C	680-1056-8	4	Without snap-in tabs

R Type (Guide Key : Right Side, Color : Black) Unit : mm

Part No.	HRS No.	No. of Contacts	Connector type
DF22R-4DEP-7.92C	680-1170-3	4	With snap-in tabs

L Type (Guide Key : Left Side, Color : Red) Unit : mm

Part No.	HRS No.	No. of Contacts	Connector type
DF22L-4DEP-7.92C	680-1175-7	4	With snap-in tabs
DF22AL-4DEP-7.92C	680-1189-1	4	Without snap-in tabs

Note : Bag packaging (100 pcs/pack). Order by number of packs.

◆Recommended Panel Cutout (Panel mount type)

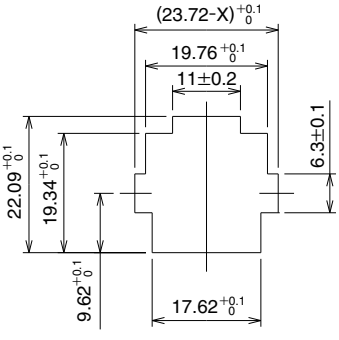

Panel thickness	X
2.0	0.48
1.6	0.96
1.2	1.44
0.8	1.92

Note 1 : Please ensure when mating this connector that the tapered portions of the panel are facing outward towards the receptacle connector's mating interface.

■Retainer

For Standard height, standard lock (Type I)

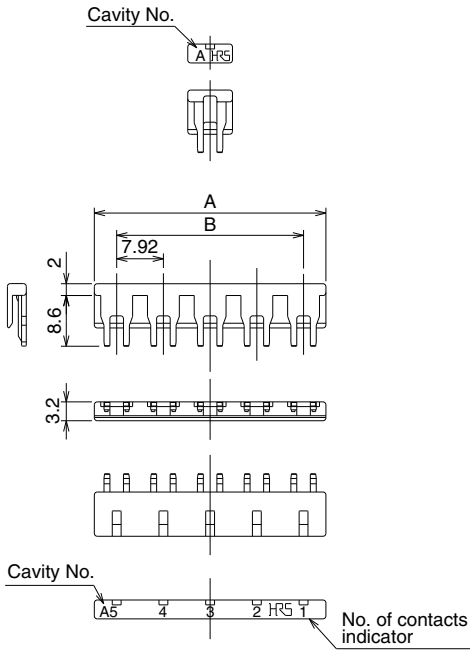

Unit : mm

Part No.	HRS No.	No. of Contacts	A	B
DF22-2RS/P-7.92	680-1209-7	2	15.50	7.92
DF22-3RS/P-7.92	680-1210-6	3	23.42	15.84
DF22-4RS/P-7.92	680-1211-9	4	31.34	23.76
DF22-5RS/P-7.92	680-1212-1	5	39.26	31.68
Applicable Socket	DF22-∗S-7.92C For Standard height, standard lock (Type I) ∗ indicates number of contacts.			

Note : Bag packaging (100 pcs/pack). Order by number of packs.

For Long type, standard lock (Type III)
Long type, enhanced ergonomic lock (Type IV)

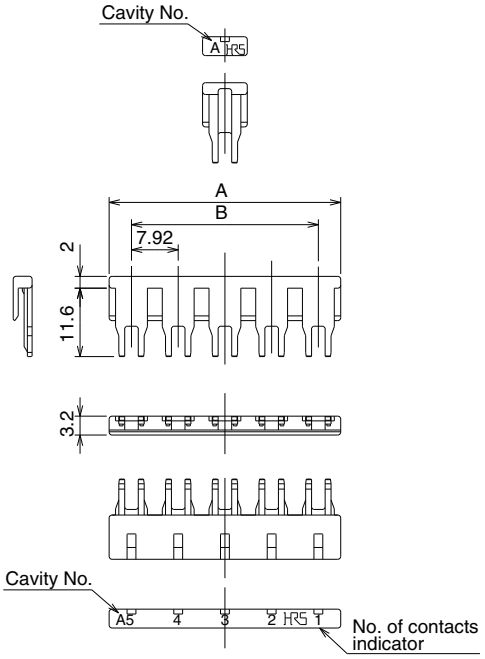

Unit : mm

Part No.	HRS No.	No. of Contacts	A	B
DF22B/C-2RS/P-7.92	680-1200-2	2	15.50	7.92
DF22B/C-3RS/P-7.92	680-1201-5	3	23.42	15.84
DF22B/C-4RS/P-7.92	680-1202-8	4	31.34	23.76
DF22B/C-5RS/P-7.92	680-1203-0	5	39.26	31.68
Applicable Socket	DF22B-∗S-7.92C For Long type, standard lock (Type III) DF22C-∗S-7.92C Long type, enhanced ergonomic lock (Type IV) DF22-∗EP-7.92C DF22A-∗EP-7.92C ∗ indicates number of contacts.			

Note 1 : Bag packaging (100 pcs/pack). Order by number of packs.
Note 2 : When connecting retainer into the plug housing, please note the cavity numbers will line up numerieally, but the retainer cavity numbers will be upside down compared to the plug cavity numbers.

Mar.1.2016 Copyright 2016 HIROSE ELECTRIC CO., LTD. All Rights Reserved.

Mar.1.2016 Copyright 2016 HIROSE ELECTRIC CO., LTD. All Rights Reserved.

◆Crimp Contact for Socket

For 14 to 16 AWG

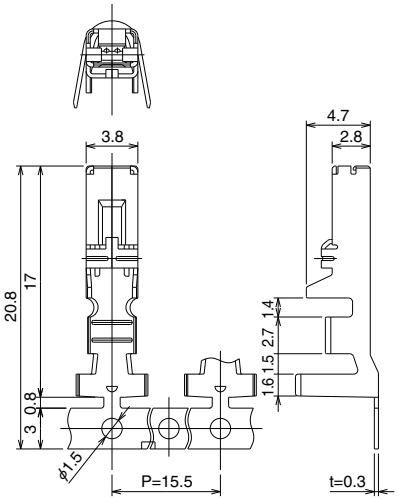

For 10 to 12 AWG

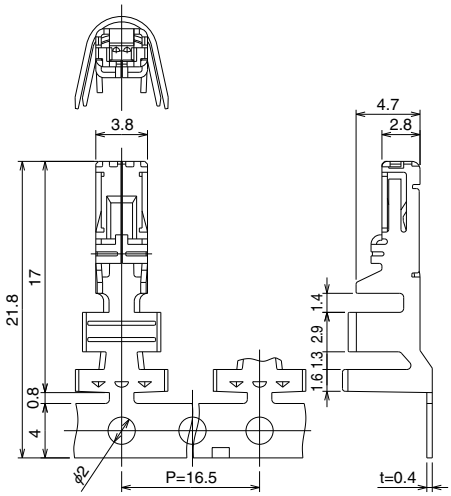

Part No.	HRS No.	Applicable cable				Packaging	Finish
		UL style	Jacket diameter	Wire size	Stranded wire conductor		
DF22-1416SCF	680-1000-3	1430	φ2.4 to 3.0mm	16 AWG, 14 AWG	26/0.254mm,41/0.26mm	2500/reel	Tin plated
DF22-1416SC	680-1001-6		φ2.6mm	16 AWG	26/0.254mm	100/pack	
DF22A-1416SCF	680-1002-9	1015	φ3.0 to 3.8mm	16 AWG	26/0.254mm	2000/reel	
DF22A-1416SC	680-1003-1		φ3.2mm,φ3.7mm	14 AWG	41/0.26mm	100/pack	
DF22A-1012SCF	680-1089-7		φ3.6 to 4.9mm	12 AWG	65/0.26mm	2000/reel	
DF22A-1012SC	680-1090-6		φ4.04mm,φ4.69mm	10 AWG	104/0.26mm	100/pack	
DF22-1416SCFA	680-1085-6	1430	φ2.4 to 3.0mm	16 AWG	26/0.254mm	2500/reel	Gold plated
DF22A-1416SCFA	680-1087-1	1015	φ3.0 to 3.8mm	14 AWG	41/0.26mm	2000/reel	
DF22A-1012SCFA	680-1106-4		φ3.6 to 4.9mm	12 AWG 10 AWG	65/0.26mm 104/0.26mm	2000/reel	

Note 1 : Applicable wire with tin plated solid soft conductor.
Note 2 : When using other than the recommended wire, contact your nearest Hirose representative.
Note 3 : Strip length: 3.5 to 4.5mm

◆Crimp Contact for In-line Plug

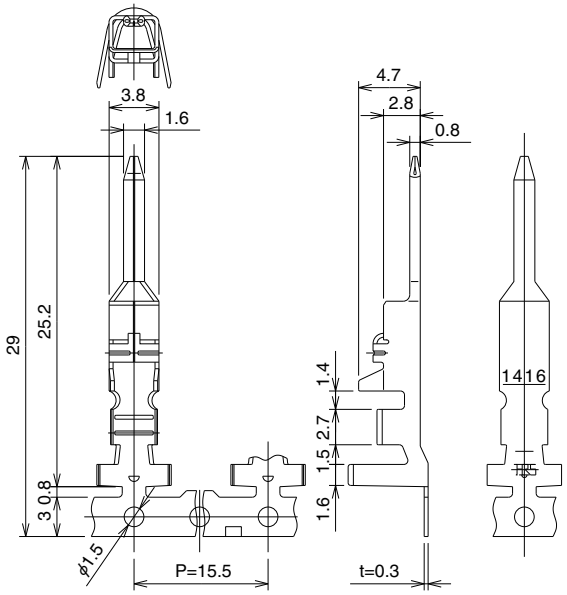

Part No.	HRS No.	Applicable cable				Packaging	Finish
		UL style	Jacket diameter	Wire size	Stranded wire conductor		
DF22-1416PCF	680-1078-0	1430	φ2.4 to 3.0mm	16 AWG, 14 AWG	26/0.254mm,41/0.26mm	2500/reel	Tin plated
DF22-1416PC	680-1080-2		φ2.6mm	16 AWG	26/0.254mm	100/pack	
DF22A-1416PCF	680-1079-3	1015	φ3.0 to 3.8mm	16 AWG 14 AWG	26/0.254mm 41/0.26mm	2000/reel	
DF22A-1416PC	680-1081-5		φ3.2mm,φ3.7mm			100/pack	
DF22-1416PCFA	680-2002-4	1430	φ2.4 to 3.0mm			2500/reel	Gold plated

Note 1 : Applicable wire with tin plated solid soft conductor.
Note 2 : When using other than the recommended wire, contact your nearest Hirose representative.
Note 3 : Strip length: 3.5 to 4.5mm

◆Mated Dimensions

●Socket to Straight Header Connection

1 Pos.

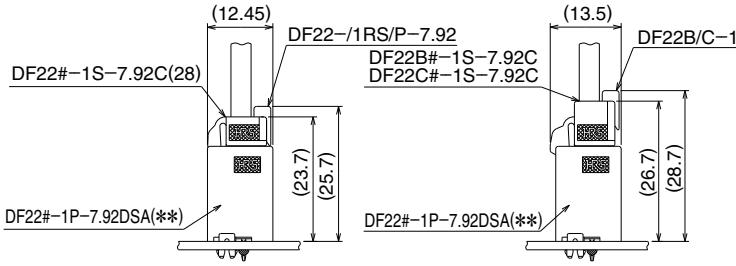

2 to 5 Pos.

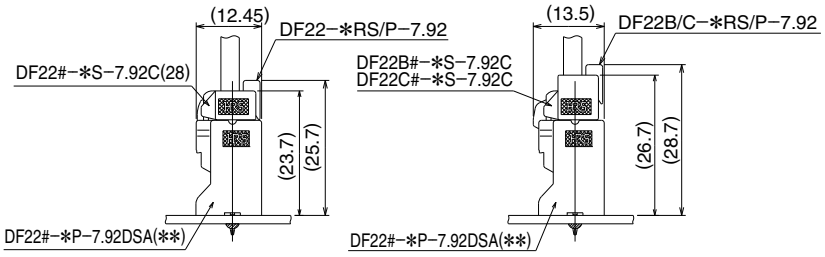

●Socket to Right Angle Header Connection

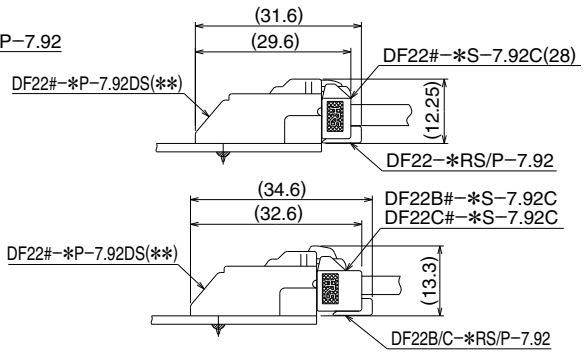

●Socket to In-line Plug (Panel mount type) Connection

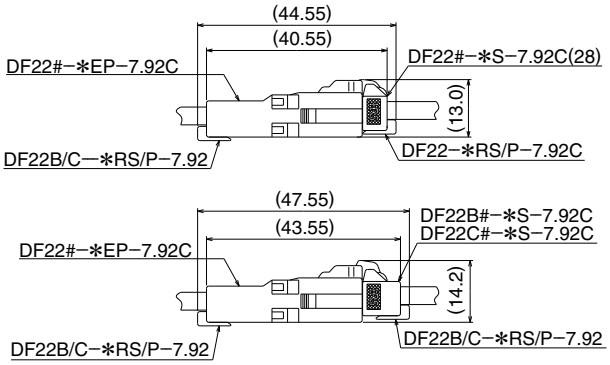

●Socket to In-line Plug Connection

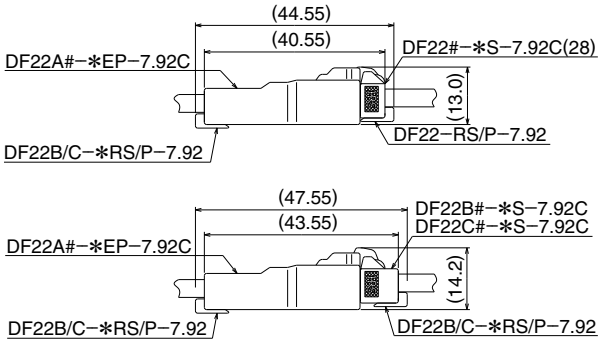

●In-line Double-row socket to In-line Double-row Plug (Panel mount type) Connection

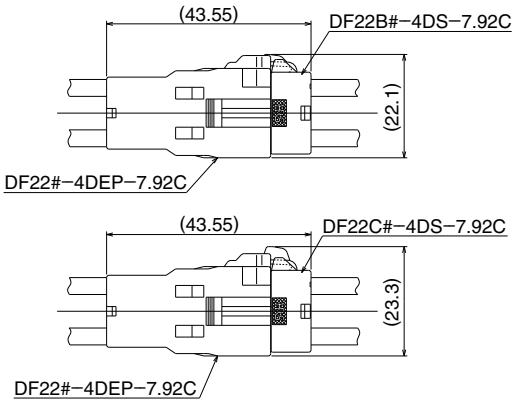

●In-line Double-row socket to In-line Double-row Plug Connection

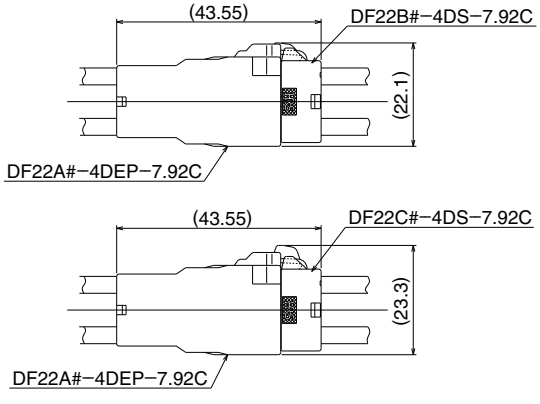

Mar.1.2016 Copyright 2016 HIROSE ELECTRIC CO., LTD. All Rights Reserved.

◆Tools

Type	Item	Part No.	HRS No.	Applicable Contacts
Automatic	Press unit	CM-105C	901-0001-0	DF22/DF22A-1416SCF/PCF/SCFA
	Applicators are used in automatic crimping machines manufactured by Hirose Electric	AP105-DF22-1416	901-4576-7	DF22-1416SCF/PCF/SCFA/PCFA
		AP105-DF22A-1416	901-4578-2	DF22A-1416SCF/PCF/SCFA
	Applicators are used in automatic crimping machines manufactured by other companies	AP109A-DF22-1416	901-4579-5	DF22-1416SCF/PCF/SCFA/PCFA
		AP109A-DF22A-1416	901-4580-4	DF22A-1416SCF/PCF/SCFA/PCFA
		AP109A-DF22A-1012	901-4582-0	DF22A-1012SCF/SCFA
	Applicator manufactured by JAPAN AUTOMATIC MACHINE	CHS893800H-UP	—	DF22-1416SCF/DF22-1416PCF
		CHS893900H-UP	—	DF22A-1416SCF/DF22A-1416PCF
		QHS895800H-UP	—	DF22A-1012SCF
Manual	Crimp tools	HT104/DF22-1416	550-0285-0	DF22-1416SC/PC
		HT104/DF22A-1416	550-0286-2	DF22A-1416SC/PC
		HT103/DF22A-1012	550-0288-8	DF22A-1012SC

Note 1 : When crimping contact DF22A-1012SCF use a press with 3.5 ton min.
Note 2 : AP109A type applicators cannot be used with the CM-105C press.
Note 3 : Any problems that occur from using tools other than those specified by Hirose, are not covered by warranty.
Note 4 : Applicator manufactured by JAPAN AUTOMATIC MACHINE (J.A.M.). Please access to HP of J.A.M., if you make inquiries about the applicator or crimp defect. (URL : http://www.jam-net.co.jp)
Note 5 : Please follow the "Crimping quality standards" and "Table of crimping conditions" when crimping contacts.

◆Contact Extraction

■ Contact extraction tool : Flat-bladed screwdriver, 1.4mm blade width
■ Intended crimp Contacts : DF22-1416SC(F), DF22-1416SCFA, DF22A-1416SC(F), DF22A-1416SCFA, DF22A-1012SC(F), DF22A-1012SCFA, DF22-1416PC(F), DF22-1416PCFA, and DF22A-1416PC(F)

■ Work Method
Housing Cross-Sectional Diagram

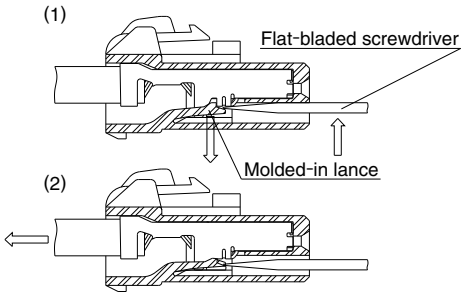

1. Refer to the drawing No. 1. Insert correct size screwdriver in the insulator against the molded-in lance. Deflect the lance as shown.
2. Assure that the lance is deflected to release the contact and pull- out wire with the terminated contact.

⚠Caution

There are parts on the crimp contact that can cause injuries, please use caution when unmating the contacts.

◆Precautions

●The connector could be damaged if it is pulled out forcibly. When it is hard to pull out, push it in slightly first and then depress the lock and un- mate.
●When thick, short sections of wire are used, the connector could be deformed due to the force of the wires' position. Route cables in such a way that they do twist when being installed.
●Incomplete insertion of the contact can be prevented by mounting a retainer; however, mounting of a retainer might not be possible when the contact protrudes beyond the socket. Insert the contact securely and then mount the retainer.
●Please refer to the documents "Cable assembly Procedure", "Crimp condition" and "Crimp quality standards" for the cable assembly procedures.
●Please refer to the "Mating/Unmating Operation Instruction Manual" for the connector operation.
●Please refer to the "Nylon Connector Guide" for handling instructions.

◆Current Ratings

The current rating listed in the catalog indicates the allowable current per contact. However, in applications requiring current transmission through all the contacts, about one-third of the listed rating should be applied.
When the current rating for the connector is 3A, and the allowable current of the conductor being used is 1A, then rating of 1A will be used for the entire assembly.
The connectors should not be mating / unmating when the electrical current is being applied.

Hot swap should not be performed.

◆Usage Environment

Please contact us about use in equipment that is subjected to repetitive high temperature and low temperature environmental conditions.

Mar.1.2016 Copyright 2016 HIROSE ELECTRIC CO., LTD. All Rights Reserved.

Creative Links to World Electronics ®

HIROSE ELECTRIC CO.,LTD.
2-6-3,Nakagawa Chuoh,Tsuzuki-Ku,Yokohama-Shi 224-8540,JAPAN
TEL: +81-45-620-3526 Fax: +81-45-591-3726
http://www.hirose.com
http://www.hirose-connectors.com

The characteristics and the specifications contained herein are for reference purpose. Please refer to the latest customer drawings prior to use.
The contents of this catalog are current as of date of 01/2016. Contents are subject to change without notice for the purpose of improvements.